STATUS:
JS 03/15/2016 - RELEASED ON ECO: 500013495

TECH-000690

ELECTRICAL CUTOUT DESIGNED TO FIT A SINGLE GANG RACO 590, STEEL CITY CY 1/2 OR SIMILAR STYLE ELECTRICAL BOX

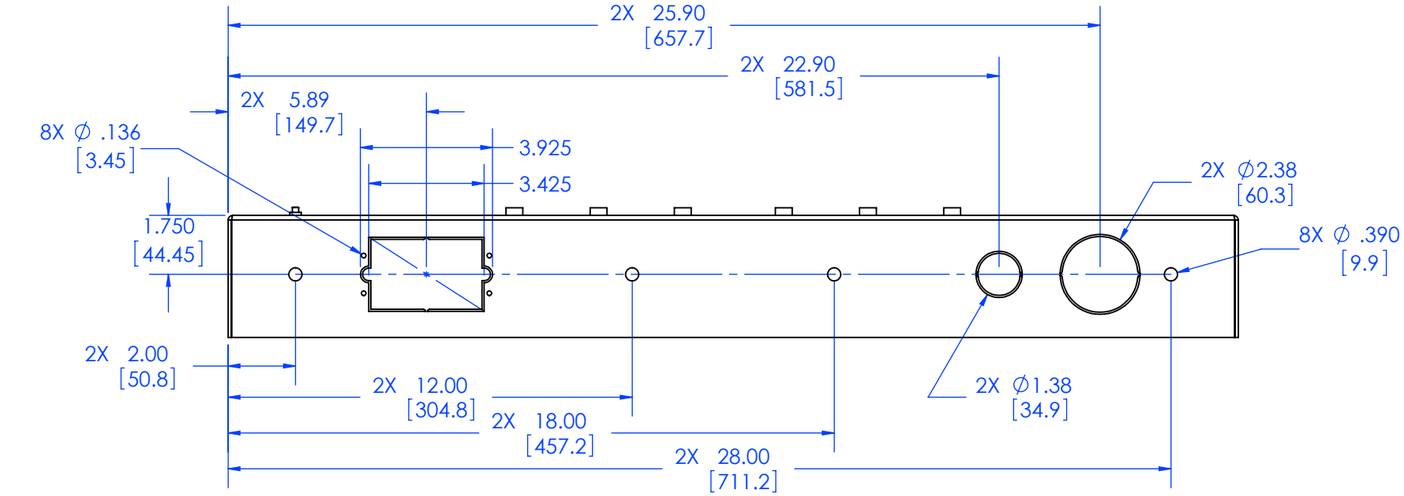

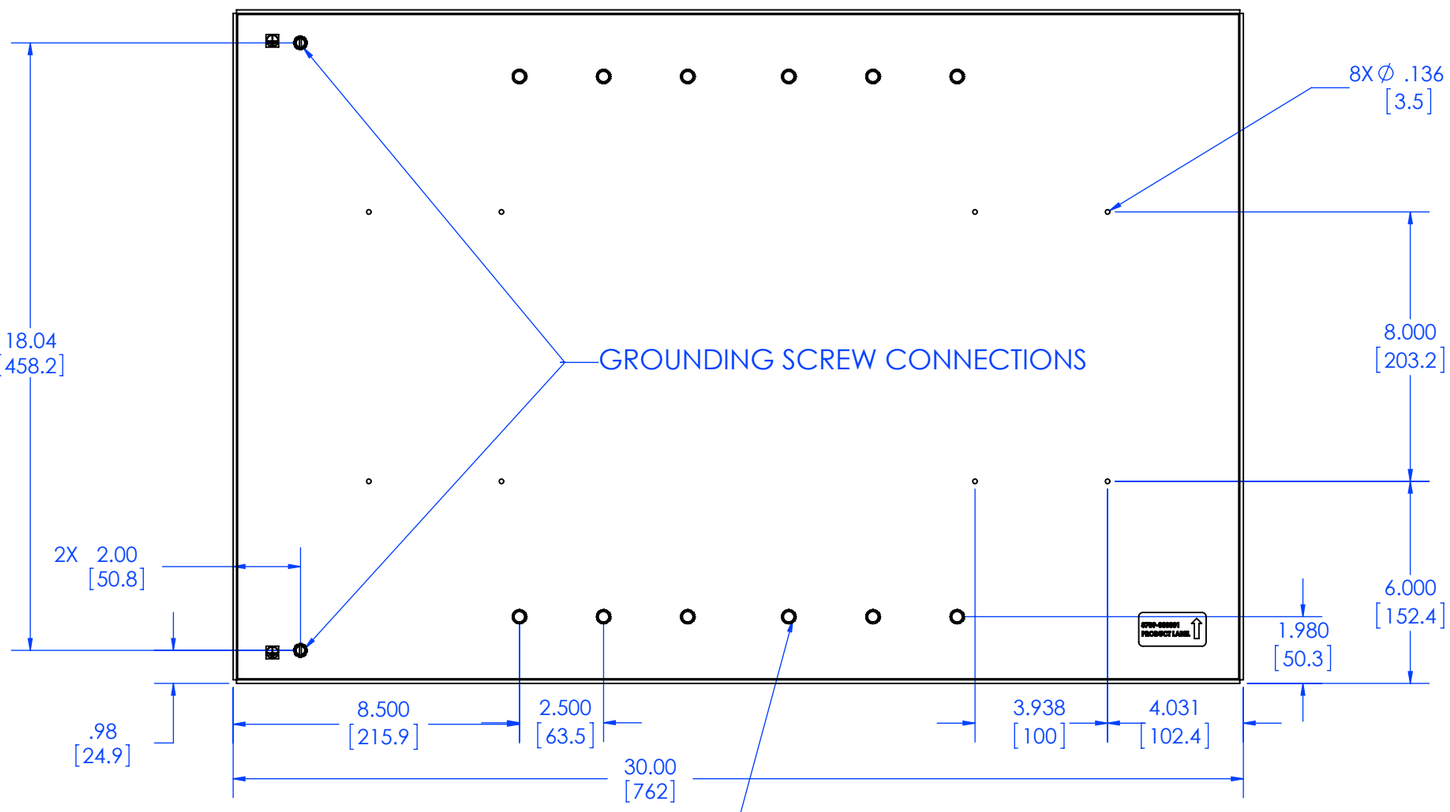

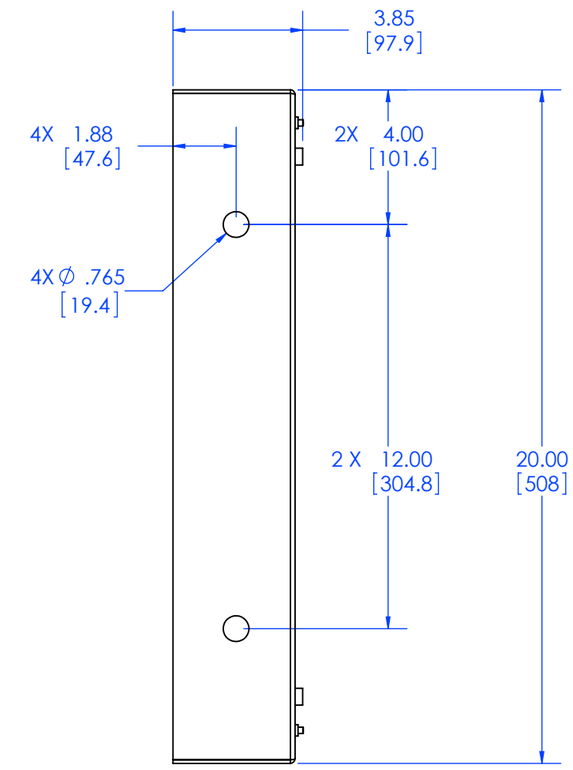

NOTE:
TRIM(NOT INCLUDED WITH PRODUCT)
HAS A WIDTH OF 1 INCH

THE INFORMATION AND DESIGNS CONTAINED IN THIS DRAWING ARE CONFIDENTIAL AND THE PROPRIETARY PROPERTY OF MILESTONE AV TECHNOLOGIES NEITHER THIS DESIGN NOR ANY INFORMATION CONTAINED IN THIS DRAWING MAY BE REPRODUCED OR DISCLOSED TO OTHERS WITHOUT THE EXPRESS WRITTEN CONSENT OF MILESTONE AV TECHNOLOGIES.

CAD GENERATED DRAWING, DO NOT MANUALLY UPDATE.

DRAWN BY	MM	4/21/2015
ENG APPROVAL		
MFG APPROVAL		
QA APPROVAL		

CHIEF®
6436 CITY WEST PKWY
EDEN PRAIRIE MN, 55344
PHONE: 866-977-3901
FAX: 877-894-6918

DESCRIPTION: In-Wall Swing Arm Accessory - Large

MODEL NO.: PAC501

SHEET 1 OF 1 | SCALE 1:4 | SIZE B | DWG. NO. TECH-000690 | REV. 01